PROJECT NAME: CADSHOP DESIGN CENTER	DRAWING NO.: 2530601

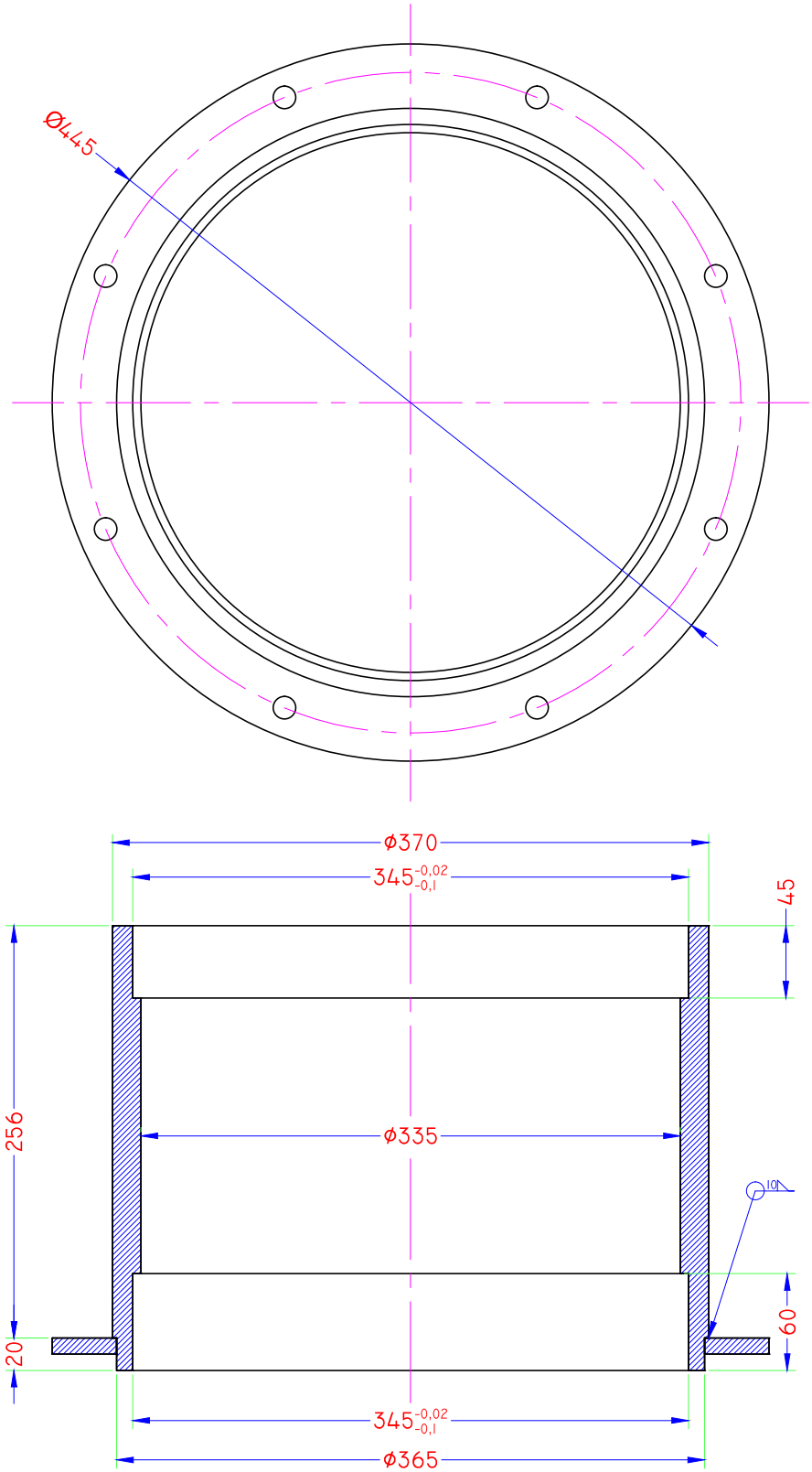

SUM	2530601	1 PARTS OF BUILT UP	370 X 276 X 247	1	BUILT UP	37.1 KG STEEL
ITEM	PART NO.	TECHNICAL DESCRIPTION		QUANTITY	MATERIAL	UNIT WEIGHT

CADSHOP
WEB SITE : WWW.CADSOUL.COM
E-MAIL: CADSOUL@CADSOUL.COM

DRAWING TITLE: 1 PARTS OF BUILT UP

CLIENT NAME:

DESIGNED BY:
CHECKED BY:
APPROVED BY:

DRAWING NO.:	FINISH	SHEET	SCALE	DATE
2530601	WHITE	37:93	DIMS IN MM	29/04/2024